# RB-99W

## 外形尺寸 & 馬達裝卸方法/ Appearance Size & Motor Installation

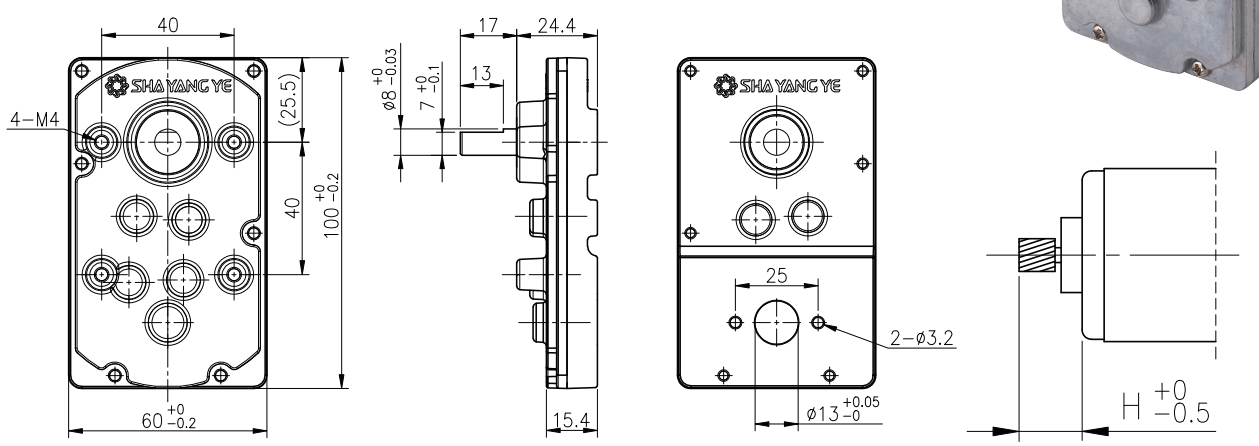


unit:mm

## 產品規格/ Product Specifications

| 外殼材質<br>Housing material | 輸出軸承型式<br>Bearing at output | 徑向負荷<br>Radial load (10mm from flange) | 軸向負荷<br>Shaft axial load | 主軸最大承受壓入力<br>Shaft press fit force, max. | 徑向間隙<br>Radial play of shaft | 軸向間隙<br>Thrust play of shaft | 背隙 (無負荷時)<br>Backlash, at no-load |
|---|---|---|---|---|---|---|---|
| 金屬<br>Metal | 含油軸承<br>Sleeve bearings | ≤ 3 kgf | ≤ 5 kgf | ≤ 30 kgf | ≤ 0.10 mm | ≤ 0.35 mm | ≤ 3° |

## 馬達齒輪型式/ Pinion Specifications

| 模數<br>Module | 齒數<br>No. of teeth | 壓力角<br>Pressure angle | 螺旋角<br>Helix angle | 孔徑 (mm)<br>Hole diameter | 減速比<br>Reduction ratio |
|---|---|---|---|---|---|
| 0.5 | 11 | 20° | 18° (左, left) | ∅ 3.16 | 1/30, 1/100, 1/147, 1/305, 1/459 |
| 0.5 | 13 | 20° | 18° (左, left) | ∅ 3.16 | 1/24, 1/54, 1/81, 1/246 |

## 標準減速比型式/ Gearboxes Specifications

| 減速比<br>Reduction ratio | 1/24, 1/30 | 1/54 | 1/81, 1/100 | 1/147 | 1/246, 1/305 | 1/459 |
|---|---|---|---|---|---|---|
| 定格容許扭力<br>Rated tolerance torque | 3 kgf-cm Max. | 6 kgf-cm Max. | 8 kgf-cm Max. | 8 kgf-cm Max. | 10 kgf-cm Max. | 10 kgf-cm Max. |
| 瞬間容許扭力<br>Max momentary tolerance torque | 9 kgf-cm | 18 kgf-cm | 24 kgf-cm | 24 kgf-cm | 30 kgf-cm | 30 kgf-cm |
| 效率<br>Efficiency | 73% | | | | 66% | |
| 馬達齒高度<br>Pinion Height (H) | 10.6 | | | | 7.0 | |
| 重量<br>Weight (g) | 325 | | | | 340 | |

- 使用相對溼度：20%~85%RH
  Operating relative humidity
- 使用溫度範圍：-10℃~+60℃
  Operating temperature range